User's Manual

For

ST-6560V3

Version 2.0
2016.08.25
All Rights Reserved

1. Key Features

- Toshiba TB6560AHQ chip - High power, maximum current 3.5A
- Resolution 1, 1/2, 1/8, 1/16 micro stepping output
- Working voltage DC12-DC30V, rated voltage 24V
- Adjustable current with 100%, 75%, 50%, 20% of full current by on-board switch.
- Half current function when no signal to prevent motor heating
- Build with a 227V 10A Relay
- Manual Control circuit included
- Overload, over-current and over-temperature safety
- Protect the computer by using isolating power(1000V DC\DC) and optoelectronic coupler
- Supports most parallel software MACH3, KCAM4, EMC2 etc.
- Fixed in Aluminum box, better cooling function than fan and safer protection for board circuit

2. Photo of 3-AXIS CNC Board

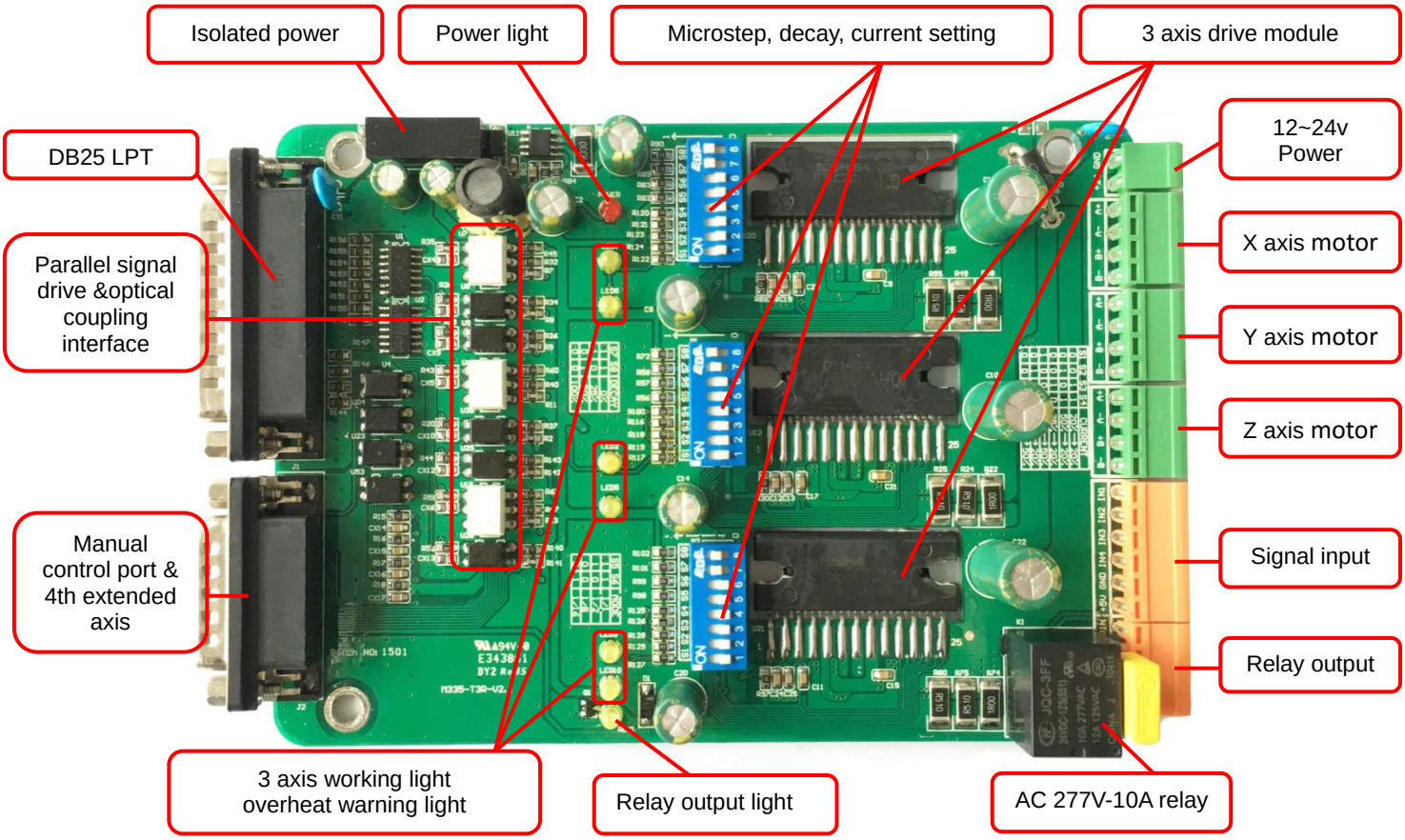

3. Hardware Installation

3.1 Selecting and Connecting Stepper Motors

WARNING: INCORRECT WIRING OF THE STEPPER MOTOR TO THE DRIVE BOARD CAN LEAD TO IMMEDIATE DAMAGE OF DRIVE BOARD - DO NOT CONNECT OR DISCONNECT MOTORS WHILE POWER IS ON.

- 4 Wire, 6 Wire, and 8 Wire stepper motors can be used.
- 4 Wire motors are recommended as they are by their manufacture true bipolar motors and easier to properly connect to stepper motor driver.
- It is critical to obtain a proper motor coil diagram of any motor you wish to utilize (making cross connections between the two coils will destroy the control circuitry).
- 1.8 deg per step resolution is the industry standard for most automation grade stepper motors and is recommended for most applications.

a. 4 Wire Stepper Diagram

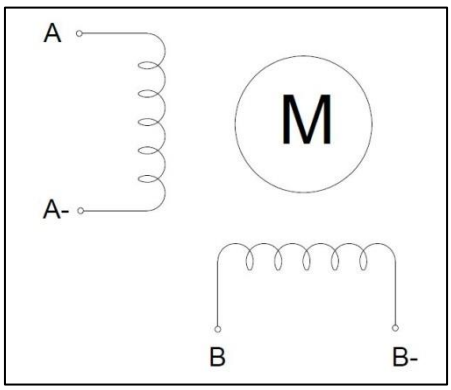

Each wire is connected to its corresponding terminal block location (i.e. A- wire is connected at A- location).

b. 6 Wire Stepper Diagram

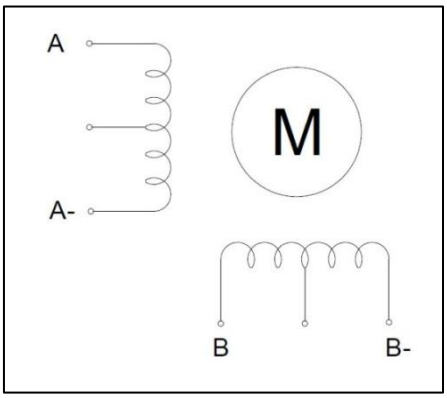

Center wire of each coil not connected (insulate termination). Remaining wires are connected to their corresponding terminal block location (i.e. A- wire is connected at A- location).

c. 8 Wire Stepper Diagram

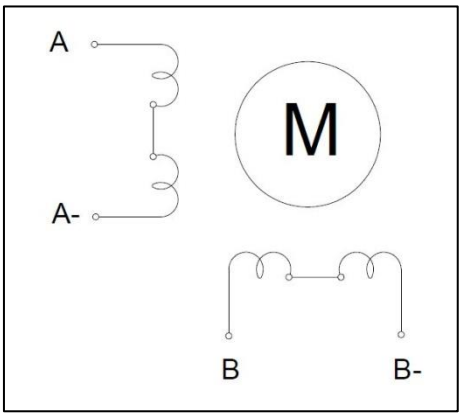

2 center wires of each coil connected (insulate connection)

Remaining wires are connected to their corresponding terminal block location (i.e. A- wire is connected at A- location).

If using 6 or 8 wire motors, connected using series wiring method, reduce labeled amperage rating by 50% (i.e. a motor rated at 4 amps should thus be considered now rated at 2 amps).

3.2 Connect to Computer by DB25

The following is to aid in the setup of the use of controller with various CAM software programs operating on your computer.

PIN	Signal
1	NC
2	X axis pulse input
3	X axis direction input
4	Y axis pulse input
5	Y axis direction input
6	Z axis pulse input
7	Z axis direction input
8	NC
9	NC
10	LPT input signal 1 (corresponding IN1 on the board)
11	LPT input signal 2 (corresponding IN2 on the board)
12	LPT input signal 3 (corresponding IN3 on the board)
13	LPT input signal 4 (corresponding IN4 on the board)
14	NC
15	LPT input signal 5 (corresponding IN5 on the board)
16	All axis enable input
17	Output control of relay (227V/10A)
18-25	GND

It is critical that your computer has parallel port DB25 outlet, If your computer does not feature a DB25 outlet, you must install one, (these can be achieved via PCMIA cards on laptop computers). The use of adapters and hubs is not recommended and most likely will not work.

3.3 Manual Control

PIN	Input Signal 0V~5V
1	X axis pulse input
2	X axis direction input
3	Y axis pulse input
4	Y axis direction input
5	Z axis pulse input
6	Z axis direction input
7	All axis enable input
8	Connect to the collector of NPN in relay, and connect to 24V through relay
9	NC
10	NC
11	NC
12	Connect to the base of NPN in relay, and pull-up to 5V by 4.7K resistance
13	5V power output (<50mA condition)
14	Direct connecting to IN1, as the input signal of parallel port PIN10
15	Power GND

3.4 Port for extending and relay

PIN (0V~5V)	1	2	3	4	5	6	7	8	9	10
Input Signal	IN1	IN2	IN3	IN4	GND	NC	NC	L2	NC	L1

4. Setting

4.1 Current adjusting and default testing

Working Current--> Pause current	S1	S2	S3	S4
20%-->20%	0	0	1	1
50%-->20%	0	1	0	1
75%-->20%	0	0	1	0
75%-->50%	1	0	0	0
100%-->20%	0	1	0	0
100%-->50%	0	0	0	0

EXAMPLE: 75%-->20%

Working current=3.5A *75%, Pause current=3.5A *20%

4.2 Subdivision mode & Decay mode setting

	S5	S6		S7	S8
1	1	1	**NO DECAY**	1	1
1/2	1	0	**SLOW DECAY**	1	0
1/8	0	0	**MID DECAY**	0	1
1/16	0	1	**FAST DECAY**	0	0

Note: If there is bumming when motor running or locked, it can be eliminated by setting the decay mode.

5. How to use MACH software?

See Pic.1: open MACH3, choose Mach3mill,click OK.

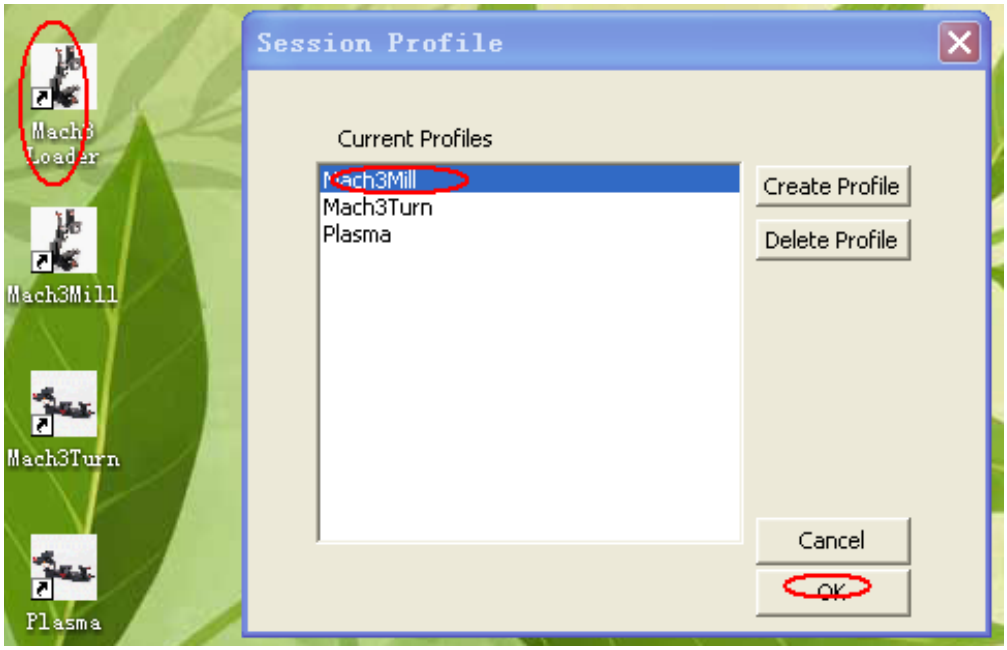

Pic.1

See Pic.2, there are common use buttons.

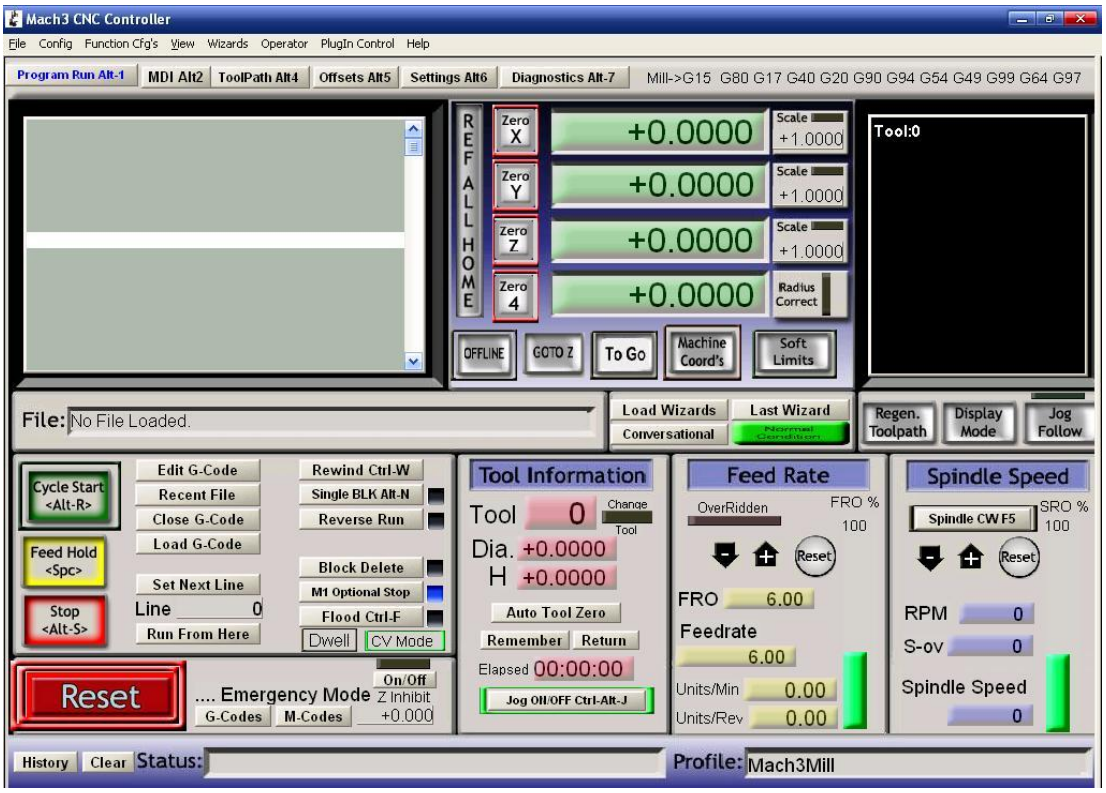

Pic.2

See Pic.3, open config-----ports and pins

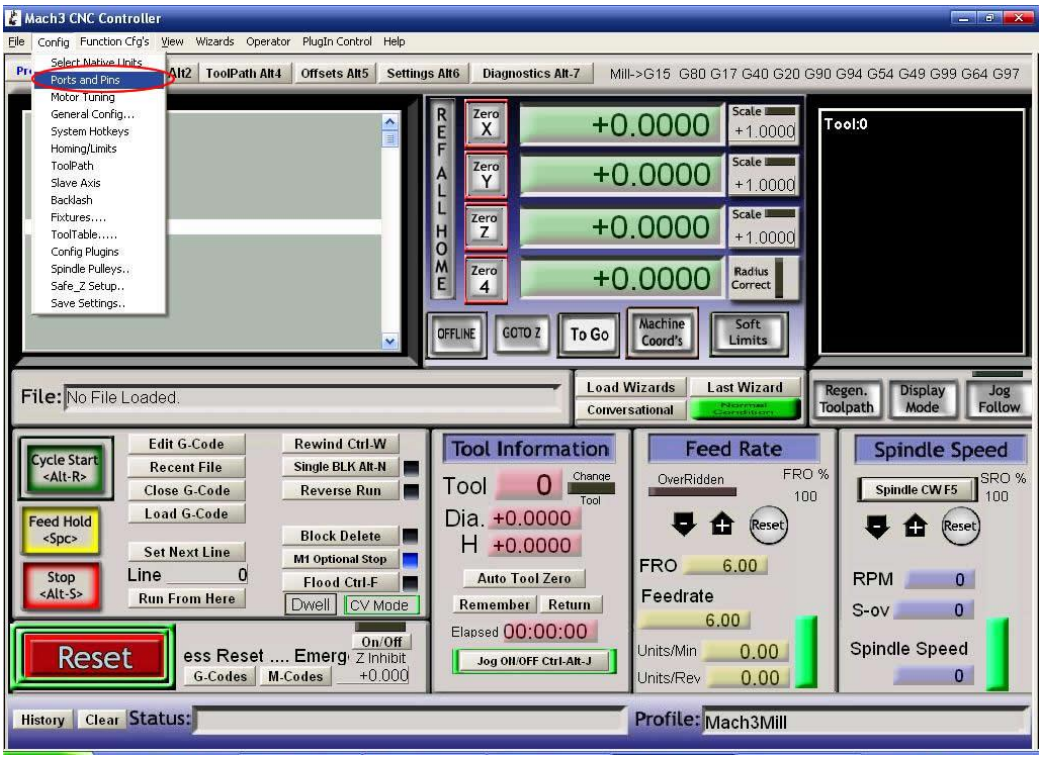

Pic.3

See Pic.4, Circle 1 frequencies setting, to control the speed, and then click Circle 2 to define ports & pins.

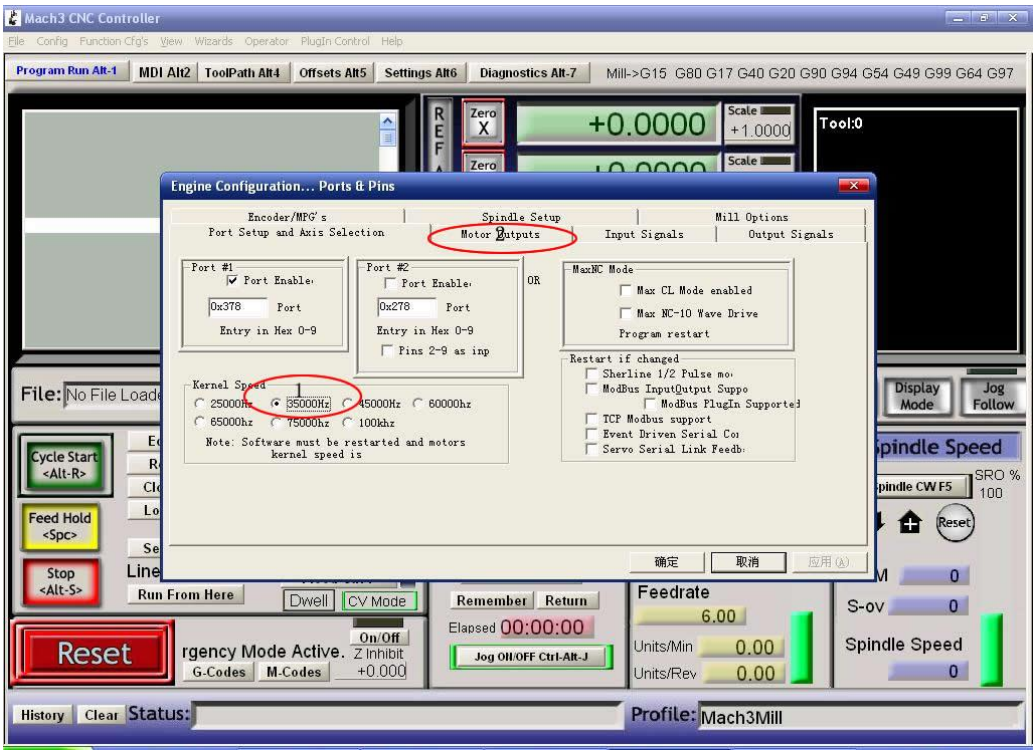

Pic.4

See Pic. 5, X\ Y\ Z\ axis "motor outputs"

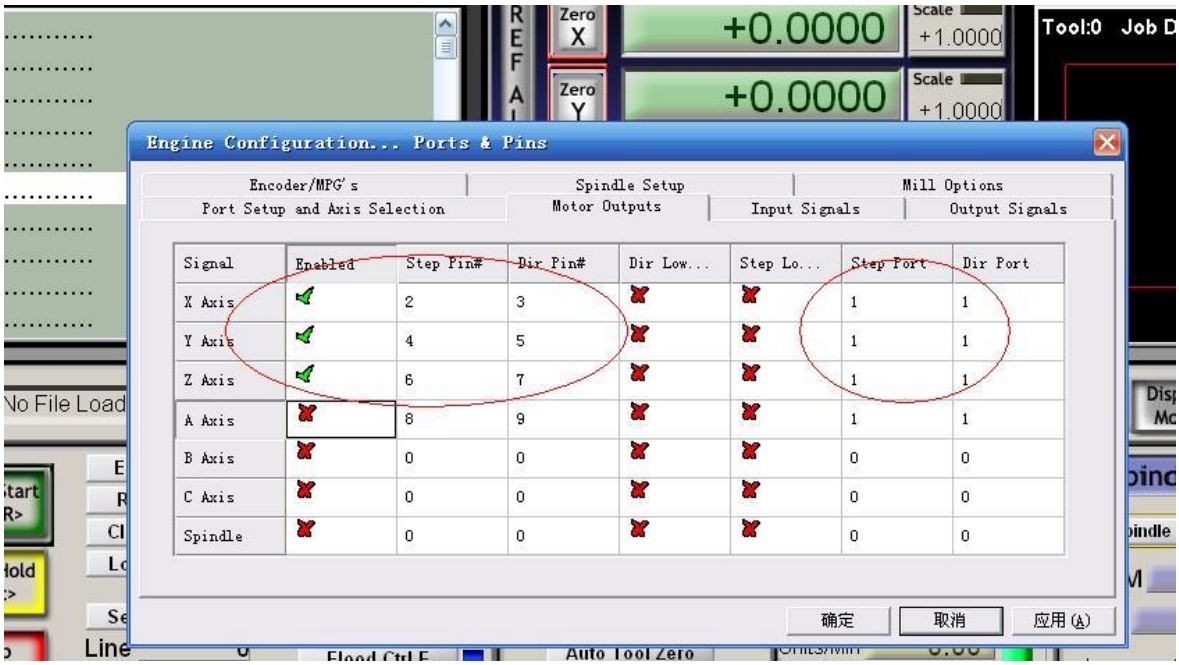

Pic.5

See Pic. 6, set "output signals"

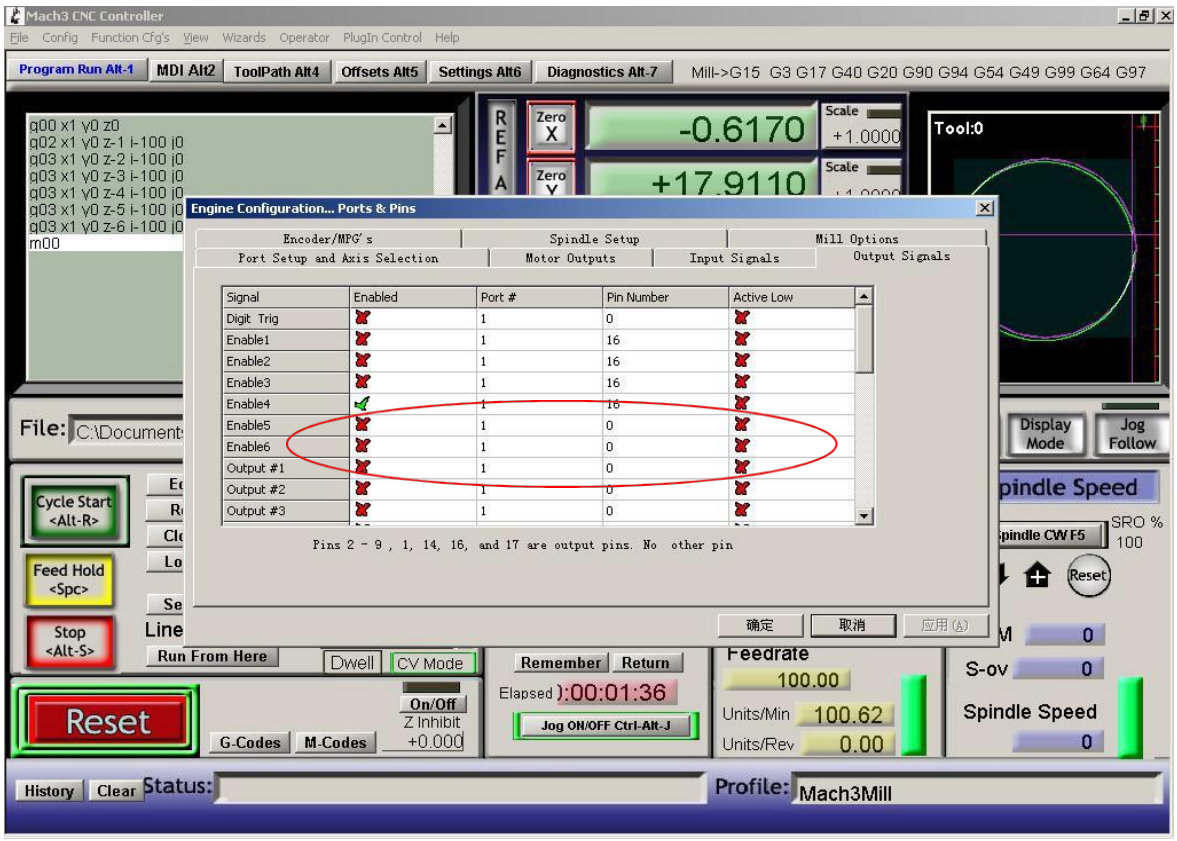

Pic.6

See Pic. 7, pulse width setting: **Step impulse: 5us, Direction impulse: 5us**

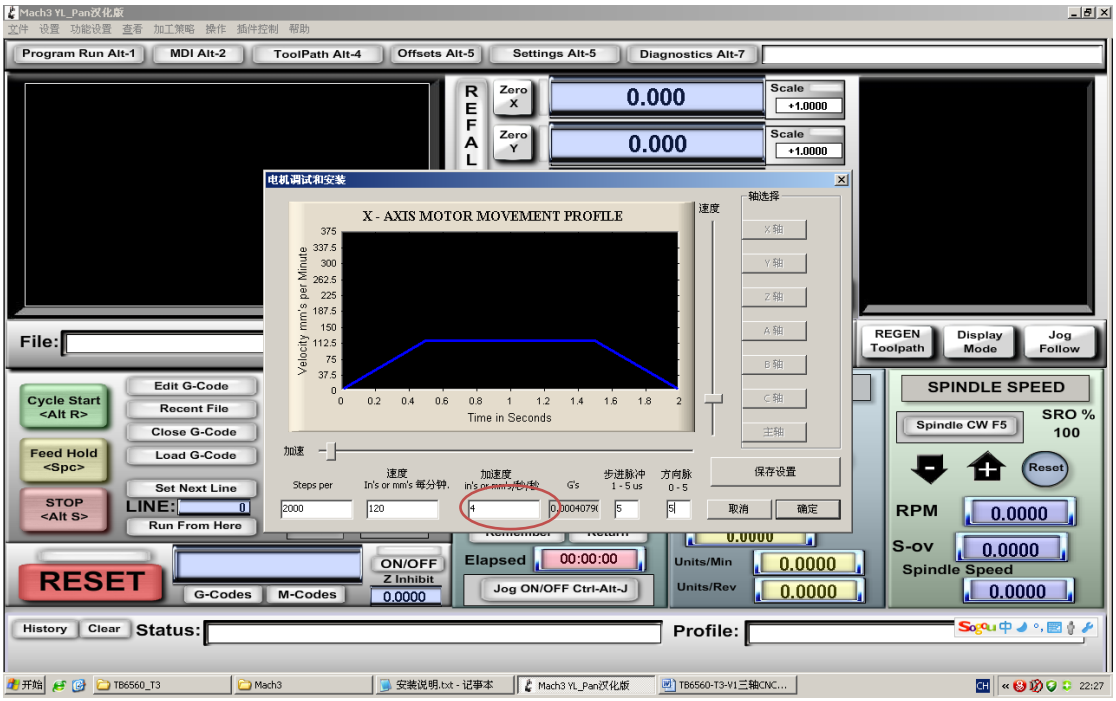

Pic.7

Pls click "load G-code", see Pic.8 and Pic.9

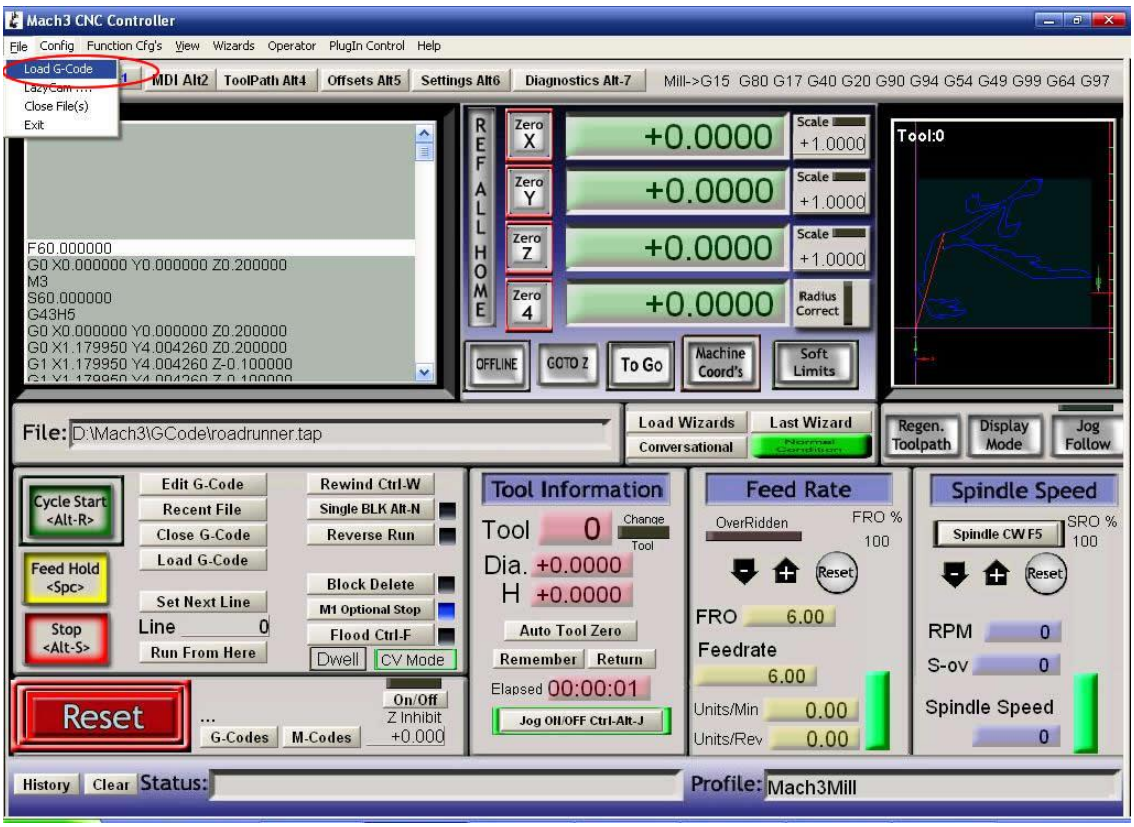

Pic.8

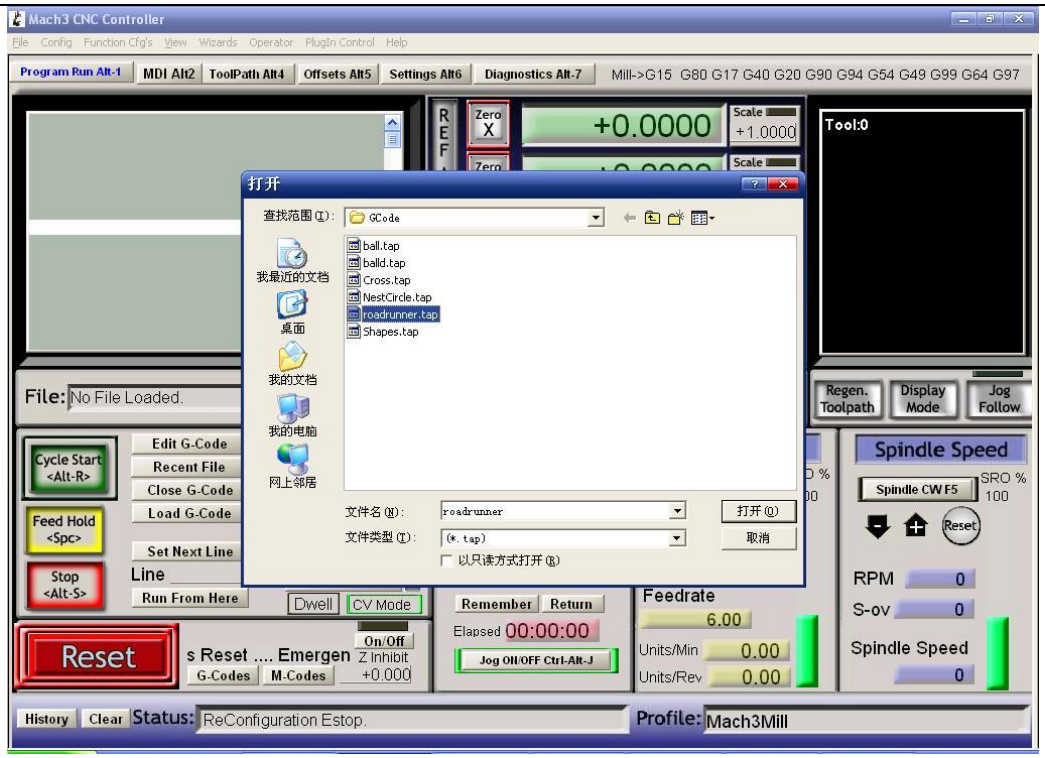

Pic.9

After open the G-code, the Reset light is blinking which means you are in stop condition. You can solve it by clicking the Reset button(see circle 1), then click circle 2 to start "Cycle-start".

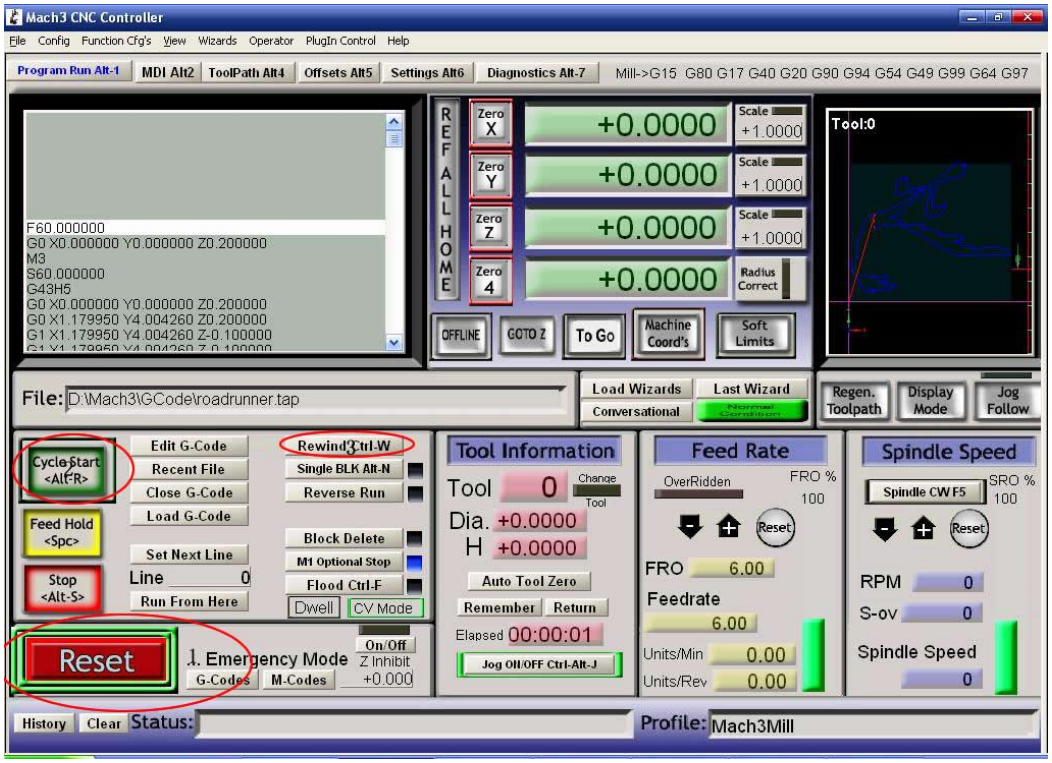

Pic.10

If you need manual control, pls click TAB button (see Pic.11)

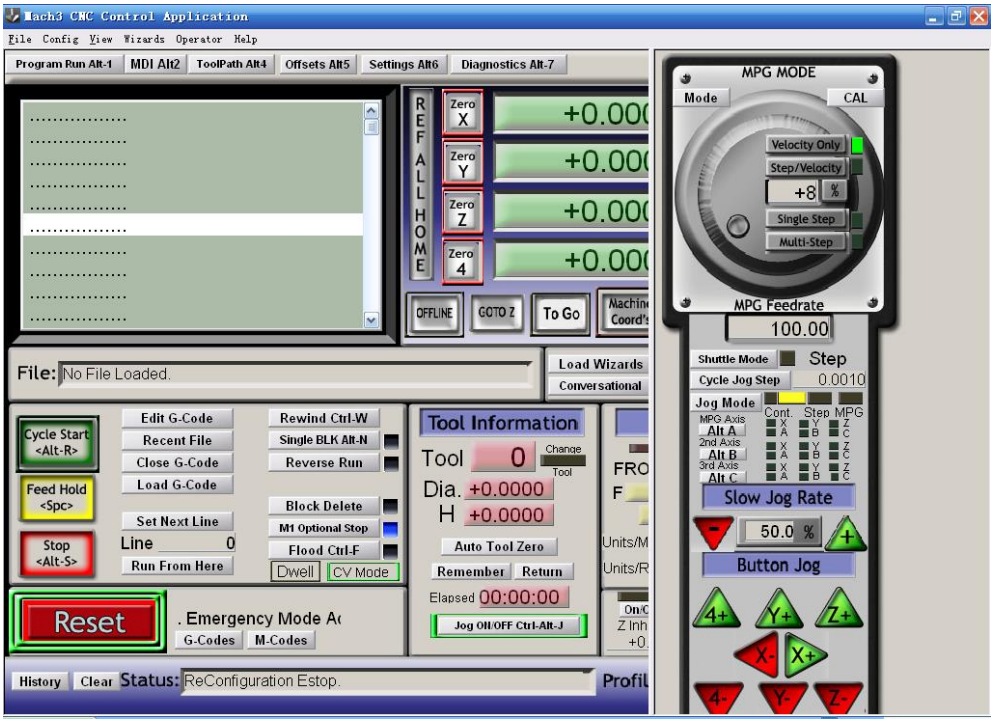

Pic.11

6. FAQ

1. Q: For long time working, the aluminum housing very hot, it’ s normal?

   A: Yes. It’ s normal, at normal temperature, housing temperature reach 90℃ is normal.

2. Q: How to confirm A+, A-, B+, B- of stepper motor?

   A: Choose two wire randomly, connect them, see if there is resistance when run the motor shaft using finger, if there is resistance, then you take these two wires with A+ and A-, and the rest of the wire will be B+ and B-.

3. Q: There is vibration when motor running or noise when motor locking, how to eliminate it?

   A: You can try to set the decay mode to eliminate it.

7. Contact

For further technical questions, please don't hesitate contact us at our email